Released on 8/28/2020

Limited Release DE Approval Needed

THE INFORMATION CONTAINED IN THIS DRAWING IS THE SOLE PROPERTY OF APICAL INDUSTRIES DBA DART AEROSPACE. ANY REPRODUCTION IN PART OR WHOLE WITHOUT THE WRITTEN PERMISSION OF APICAL INDUSTRIES DBA DART AEROSPACE IS PROHIBITED.

REVISIONS			
REV	DESCRIPTION	DATE	APPROVED
N/C	INITIAL RELEASE	08-03-20	J. GARDINER

NOTES:

1. FOR INSTALLATION INSTRUCTIONS REFER TO DOCUMENT II145-6.

△2 IDENTIFY IAW MPP-120 FOR FAA-PMA.

△3 APPLY A THIN COAT OF MASTINOX, F/N 79 TO ALL FAYING SURFACES.

△4 MATCH DRILL HOLES WITH CORRESPONDING ASSEMBLY.

△5 INSTALL F/N'S 90, 91, 92, 58, & 59, WET WITH F/N 100.

△6 ATTACH SAFETY WIRE, F/N 82, TO SCREWS ON TOP OF MULTICABLE BOX F/N 60, ONCE ALL CABLES HAVE BEEN RIGGED.

△7 INSTALL PLACARDS F/N 97, F/N 98, & F/N 119 ON INSTRUMENT PANEL IN PILOT'S VIEW. INSTALL PLACARD F/N 99 IN PLAIN VIEW IN FWD & AFT CABINS.

△8 APPLY A LAYER OF PRO-SEAL, F/N 80, AROUND THE TOP OF THE MULTICABLE BOX, F/N 60, AFTER ALL CABLES HAVE BEEN RIGGED AND PRIOR TO ATTACHING BOX LID.

△9 USE COPPER WIRE, F/N 102, TO SECURE T-HANDLE ON PULL CABLE, F/N 25 & 26 TO THE T-HANDLE BRACKET, F/N 24.

△10 INSTALLATION OF SKID EXTENSION KIT, 654.6711 PER II145-6 ON STANDARD SKID GEAR.

△11 USE TYWRAP, F/N 72, TO ATTACH PULL CABLES & WIRES TO EXISTING ROUTING BUNDLES AS NEEDED.

△12 DRILL HOLE .438 THRU BOTTOM SKIN.

△13 DRILL HOLE .249 THRU BOTTOM SKIN.

△14 CUT BUNA-N RUBBER, F/N 81, TO CORRECT SIZE AND ATTACH TO T-BOLT CLAMPS, F/N 50.

△15 APPLY A LAYER OF PRO-SEAL, F/N 80, PRIOR TO INSTALL.

△16 EXISTING FLOAT INSTALLATION POINT.

△17 ALTERNATE: P/N 646.5910 PULL CABLE ASSEMBLY.

△18 ALTERNATE: P/N 601.4038. USE ONLY WITH ALTERNATE P/N 601.4039

△19 ALTERNATE: P/N 601.4039. USE ONLY WITH ALTERNATE P/N 601.4038

△20 ALTERNATE: P/N 646.4103, 651.3403

△21 VALVE COVER FOR LIFERAFT RESERVOIR

△22 VALVE COVER FOR FLOAT RESERVOIR

△23 VERIFY PULL FORCES USING P/N 606.7803 TEST TOOL PER II145-6

6721	6720	6719	6718	6717	6716	6715	6714	6713	6712	6711	6710	6709	6708	6707	6706	6705	6704	6703	6702	6701	F/N	P/N	DESCRIPTION	MAT'L	SPEC
					1																18	648.0202	CLAMP ASSY		
2								2	2												17	649.5501	UPPER CLAMP ASSY		
			2			2	2					2	2	2	2		2		2	2	16	602.3005	HOSE ASSY		
			2			2	2					2	2	2	2		2		2	2	15	602.3004	HOSE ASSY		
			1			1	1					1	1	1	1		1		1	1	14	602.3003	HOSE ASSY		
			1			1	1					1	1	1	1		1		1	1	13	602.3002	HOSE ASSY		
			1			1	1					1	1	1	1		1		1	1	12	602.3012	HOSE ASSY		
										2											11	646.6801	SKIDTUBE EXTENSION ASSY		△3
								1													10	651.4103	ELEC ACTIVATION		
									1												9	651.4101	ELEC ACTIVATION		
	1										1	1	1	1							8	646.5405	FWD FLOAT ASSY R.H. W/ GUARD		
	1										1	1	1	1							7	646.5406	FWD FLOAT ASSY L.H. W/ GUARD		
															1		1		1	1	6	646.5402	FWD FLOAT ASSY R.H.		
															1		1		1	1	5	646.5401	FWD FLOAT ASSY L.H.		
											1		1		1				1		4	646.5504	AFT FLOAT ASSY R.H.		
											1		1		1				1		3	646.5503	AFT FLOAT ASSY L.H.		
	1											1		1			1			1	2	646.5544	AFT FLOAT ASSY W/LIFERAFT R.H		
	1											1		1			1			1	1	646.5543	AFT FLOAT ASSY W/LIFERAFT L.H.		
X																						654.6721	OEM AUTO INFLATION KIT		△2
	X																					654.6720	OEM REMOVABLE PROVISIONS		△2
		X																				654.6719	OEM FIXED PROVISIONS KIT B		△2
			X																			654.6718	OEM FIXED PROVISIONS KIT A		△2
				X																		654.6717	TRAKKA RELOCATION KIT		△2
	1				X																	654.6716	VALVE COVER		△2
						X																654.6715	SUPPLEMENTAL FIXED PROVISIONS KIT (EFS ONLY)		△2
							X															654.6714	SUPPLEMENTAL FIXED PROVISIONS KIT (EFS W/ RAFT)		△2
								X														654.6713	AUTO INFLATION KIT (W/O OEM FIXED PROVISIONS)		△2
									X													654.6712	AUTO INFLATION KIT (W/ OEM FIXED PROVISIONS)		△2
										X												654.6711	SKID EXTENSIONS		△2 △10 △20
											X											654.6710	EMERGENCY FLOAT SYSTEM W/ HOIST GUARDS REMOVABLE PROVISIONS		△2
												X										654.6709	EMERGENCY FLOAT SYSTEM W/ LIFERAFT & HOIST GUARDS REMOVABLE PROVISIONS		△2
													X									654.6708	EMERGENCY FLOAT SYSTEM W/ HOIST GUARDS		△2
														X								654.6707	EMERGENCY FLOAT SYSTEM W/ LIFERAFT & HOIST GUARDS		△2
															X							654.6706	EMERGENCY FLOAT SYSTEM REMOVABLE PROVISIONS		△2
																X						654.6705	EMERGENCY FLOAT SYSTEM FIXED PROVISIONS		△2
																	X					654.6704	EMERGENCY FLOAT SYSTEM W/ LIFERAFT REMOVABLE PROVISIONS		△2
																		X				654.6703	EMERGENCY FLOAT SYSTEM W/ LIFERAFT FIXED PROVISIONS		△2
																			X			654.6702	EMERGENCY FLOAT SYSTEM		△2
																				X		654.6701	EMERGENCY FLOAT SYSTEM W/LIFERAFT		△2

NEXT ASSY (S)

ORIGINAL DATE (MO-DA-YR) 08-03-20

DRAWN BY A.FLORES | CHECKER R.TAKAHASHI

DRAWING APPROVAL A.QUAN 08-03-20

CONTRACT No.

UNLESS OTHERWISE SPECIFIED DIMENSIONS ARE IN INCHES TOLERANCES ARE:
2 PLACE DECIMALS ±.05
3 PLACE DECIMALS ±.030
ANGLES ± .5°

DART AEROSPACE
APICAL INDUSTRIES, INC. dba DART AEROSPACE
3030 ENTERPRISE CT., SUITE A
VISTA, CA. 92081
(760)-724-5300

BK117 D2/D3 EMERGENCY FLOAT AND LIFERAFT KIT

SIZE	CAGE CODE	DWG. NO.	REV.
B	07MZ6	654.6700	N/C

SCALE

Released on 8/28/2020

Limited Release DE Approval Needed

THE INFORMATION CONTAINED IN THIS DRAWING IS THE SOLE PROPERTY OF APICAL INDUSTRIES DBA DART AEROSPACE. ANY REPRODUCTION IN PART OR WHOLE WITHOUT THE WRITTEN PERMISSION OF APICAL INDUSTRIES DBA DART AEROSPACE IS PROHIBITED.

	1											1		1			1			1	60	624.9001	MULTI CABLE BOX		△6 △8
			8			8	8					8	8	8	8		8		8	8	59	644.6111	SLEEVE		
			16			16	16					16	16	16	16		16		16	16	58	644.6210	SLEEVE RETAINER		
			1			1	1						1	1		1		1	1	1	57	646.5907	PULL CABLE ASSY		△17
			10			5	10					10	5	10	5		10		5	10	56	600.0540	BOLT	AN3C3A	
			38			22	38					38	22	38	22		38		22	38	55	601.0757	BOLT	AN3C4A	
24			98			54	98	24	24			98	54	98	54		98		54	98	54	601.0774	WASHER	NAS1149C0363R	
6			41			26	41	6	6			41	26	41	26		41		26	41	53	601.0789	NUT	MS21043-3	
8			14				14	1	1			14		14			14			14	52	614.8010	TAB		
			20"			20"	20"					20"	20"	20"	20"		20"		20"	20"	51	601.1806	HEAT SHRINK TUBING	MS23053/4303-0	
	2											2		2			2			2	50	648.5201	T-BOLT LOOP CLAMP		△14
	1										1	1	1	1	1		1		1	1	49	601.4035	RECEPTACLE COVER	MS3181-8A	
			1				1					1		1			1			1	48	614.6202	PULL HANDLE LEVER		
			1			1	1						1	1		1	1		1	1	47	634.0501	HANDLE SHIM		
			1			1	1						1	1		1	1		1	1	46	614.2302	HANDLE ASSY		
			1			1	1						1	1		1	1		1	1	45	601.0730	LOOP CLAMP	MS21919WDG17	
			22			10	22					22	10	22	10		22		10	22	44	601.0797	LOOP CLAMP	MS21919WDG3	
			12				12					12		12			12			12	43	601.1592	LOOP CLAMP	MS21919WDG6	
			13			9	13					13	9	13	9		13		9	13	42	601.0776	LOOP CLAMP	MS21919WDG8	
			9			8	9					9	8	9	8		9		8	9	41	600.0685	LOOP CLAMP	MS21919WDG56	
			3			3	3					3	3	3	3		3		3	3	40	601.1516	UNION TEE		
			1				1					1		1			1			1	39	601.2370	TEE -4		
			2				2					2		2			2			2	38	601.2368	ELBOW		
		4	9			13	9					9	9	13	9		13		9	13	37	601.2956	CLICK BOND	CB3001CR3-8	
			1			1	1						1	1		1		1	1	1	36	646.5910	PULL CABLE ASSY		
	1										1	1	1	1	1		1		1	1	35	646.7402	FLOAT RESERVOIR ASSY		
	1											1		1			1			1	34	646.7504	LIFERAFT RESERVOIR ASSY		
	1											1		1			1			1	33	646.4302	CABLE BOX MOUNT ASSY		
		2					2					2		2			2			2	32	646.6003	BRACKET ASSY		
			2								2	2			2		2				31	651.4004	H145 REMOVABLE ASSY		
										16											30	601.3161	RIVET	CR3212-4-9	
													2	2					2	2	29	651.4003	H145 BRACKET ASSY		△15
			1				1					1		1			1			1	28	646.5904	PULL CABLE ASSY		
			1				1					1		1			1			1	27	646.5903	PULL CABLE ASSY		
			1				1					1		1			1			1	26	646.5902	PULL CABLE ASSY		
			1				1					1		1			1			1	25	646.5901	PULL CABLE ASSY		
			2				2					2		2			2			2	24	646.8401	T-HANDLE CLAMP ASSY		
												REF		REF						REF	23	602.3011	HOSE ASSY		
					1																22	647.9904	VALVE COVER ASSY		△21
			1				1					1		1			1			1	21	602.3010	HOSE ASSY		
			1				1					1		1			1			1	20	602.3009	HOSE ASSY		
			1				1					1		1			1			1	19	602.3008	HOSE ASSY		
6721	6720	6719	6718	6717	6716	6715	6714	6713	6712	6711	6710	6709	6708	6707	6706	6705	6704	6703	6702	6701	F/N	P/N	DESCRIPTION	MAT'L	SPEC

ORIGINAL DATE (MO-DA-YR) 08-03-20
DRAWN BY A.FLORES
CHECKER R.TAKAHASHI
DRAWING APPROVAL A.QUAN 08-03-20
CONTRACT No.

UNLESS OTHERWISE SPECIFIED
DIMENSIONS ARE IN INCHES
TOLERANCES ARE:
2 PLACE DECIMALS ±.05
3 PLACE DECIMALS ±.030
ANGLES ± .5°

DART AEROSPACE
APICAL INDUSTRIES, INC. dba DART AEROSPACE
3030 ENTERPRISE CT., SUITE A
VISTA, CA. 92081
(760)-724-5300

BK117 D2/D3 EMERGENCY FLOAT AND LIFERAFT KIT

SIZE B | CAGE CODE 07MZ6 | DWG. NO. 654.6700 | REV. N/C

SCALE

Released on 8/28/2020

Limited Release DE Approval Needed

THE INFORMATION CONTAINED IN THIS DRAWING IS THE SOLE PROPERTY OF APICAL INDUSTRIES DBA DART AEROSPACE. ANY REPRODUCTION IN PART OR WHOLE WITHOUT THE WRITTEN PERMISSION OF APICAL INDUSTRIES DBA DART AEROSPACE IS PROHIBITED.

6721	6720	6719	6718	6717	6716	6715	6714	6713	6712	6711	6710	6709	6708	6707	6706	6705	6704	6703	6702	6701	F/N	P/N	DESCRIPTION	MAT'L	SPEC
		8				4	8					8	4	8	4		8		4	8	103	601.1900	NUTPLATE	MS21059L3	
			2FT				2FT					2FT		2FT			2FT			2FT	102	601.1919	COPPER WIRE		
			4			4	4					4	4	4	4		4		4	4	101	624.2202	AFT SADDLE BRACKET		
			1			1	1					1	1	1	1		1		1	1	100	601.2045	RTV	LOCTITE 598	
			4				4					4		4			4			4	99	634.9703	EMERGENCY PLACARD		△7
			1				1					1		1			1			1	98	634.9706	LIFERAFT PLACARD		△7
			1				1					1		1			1			1	97	634.9720	FLOAT PLACARD		△7
										4											96	601.0970	NUT	MS21043-4	
										8											95	601.0863	WASHER	NAS1149C0363R	
										4											94	601.0840	BOLT	AN4C40A	
			4			4	4					4	4	4	4		4		4	4	93	601.1625	SPACER	NAS43DD3-24	
			10FT			10FT	10FT					10FT	10FT	10FT	10FT		10FT		10FT	10FT	92	601.1347	SPIRAL WRAP		
										4											91	601.2994	BOLT		
			32			32	32					32	32	32	32		32		32	32	90	601.1065	RIVET	CR3212-4-3	
		16					16					16		16			16			16	89	601.1774	RIVET	MS20470AD3-3	
			6				6					6		6			6			6	88	601.0720	BOLT	AN3C5A	
		2					2					2		2			2			2	87	601.1617	NUTPLATE	MS21075L3	
														REF				REF		REF	86	601.3473	RIVET	NAS1097AD4-3	
		1					1					1		1			1			1	85	645.0210	DOUBLER		
1								1	1												84	601.2255	GROMMET	MS35489-33	
1		1	2			1	3	1	1			3	1	3	1		3		1	3	83	601.1247	GROMMET	MS35489-11	
			8FT			4FT	8FT					8FT	4FT	8FT	4FT		8FT		4FT	8FT	82	601.1876	SAFETY WIRE	MS20995C20	
			1			1	1					1	1	1	1		1		1	1	81	600.0038	BUNA-N-RUBBER	MIL-R-3065	
1		1	1			1	1	1	1			1	1	1	1		1		1	1	80	601.1150	SEMKIT PRO SEAL	MIL-S-8802 CLASS B	
			1			1	1					1	1	1	1		1		1	1	79	600.0927	MASTINOX	MIL-P-8116B	
													REF	REF					REF	REF	78	R853-00112000-01	UTILITY STEP ASSY (RH)		
													REF	REF					REF	REF	77	R853-00112000-00	UTILITY STEP ASSY (LH)		
													REF	REF					REF	REF	76	AFM-SM117-11	UTILITY STEP ASSY (RH)		
													REF	REF					REF	REF	75	AFM-SM117-10	UTILITY STEP ASSY (LH)		
	4										4	4	4	4	4		4		4	4	74	650.1310	-6 NIPPLE		
10			10				10	10	10			10		10			10			10	73	600.0644	CONNECT RING		
10			4			4	4	10	10			4	4	4	4		4		4	4	72	601.1878	TYWRAP	MS23367-5	△11
		66				14	66					66	14	66	14		66		14	66	71	601.1119	RIVET	MS20470AD4-5	
2			2			2	2	2	2			2	2	2	2		2		2	2	70	600.0926	EPOXY	1537A31 REV. C	
	4										4	4	4	4	4		4		4	4	69	634.4701	-6 QUICK DISCONNECT		
		2					2					2		2			2			2	68	646.7810	DOUBLER		△15
4								4	4												67	601.1874	BOLT	AN3C10A	
		2														2		2			66	651.4006	H145 FIXED ASSY		△15
4								4	4												65	601.1670	NYLON WASHER	NAS1515H3L	
	12										12	12	12	12	12		12		12	12	64	601.2246	NUT	MS21043-6	
	24										24	24	24	24	24		24		24	24	63	601.1882	WASHER	NAS1149C0663R	
	12										12	12	12	12	12		12		12	12	62	601.4394	BOLT	AN6C43A	△3
4								4	4												61	601.0785	BOLT	AN3C6A	

ORIGINAL DATE (MO-DA-YR) 08-03-20
DRAWN BY A.FLORES | CHECKER R.TAKAHASHI
DRAWING APPROVAL A.QUAN 08-03-20
CONTRACT No.

UNLESS OTHERWISE SPECIFIED
DIMENSIONS ARE IN INCHES
TOLERANCES ARE:
2 PLACE DECIMALS ±.01
3 PLACE DECIMALS ±.005
ANGLES ± .5°

DART AEROSPACE
APICAL INDUSTRIES, INC. dba DART AEROSPACE
3030 ENTERPRISE CT., SUITE A
VISTA, CA. 92081
(760)-724-5300

BK117 D2/D3 EMERGENCY FLOAT AND LIFERAFT KIT

SIZE B | CAGE CODE 07MZ6 | DWG. NO. 654.6700 | REV. N/C

SCALE | SHEET 3 OF 10

Released on 8/28/2020

Limited Release DE Approval Needed

THE INFORMATION CONTAINED IN THIS DRAWING IS THE SOLE PROPERTY OF APICAL INDUSTRIES DBA DART AEROSPACE. ANY REPRODUCTION IN PART OR WHOLE WITHOUT THE WRITTEN PERMISSION OF APICAL INDUSTRIES DBA DART AEROSPACE IS PROHIBITED.

6721	6720	6719	6718	6717	6716	6715	6714	6713	6712	6711	6710	6709	6708	6707	6706	6705	6704	6703	6702	6701	F/N	P/N	DESCRIPTION	MAT'L	SPEC
1																					127	634.6802	135-145 SWITCH ASSY		
				1																	126	652.1302	FWD BRACKET ASSY		
				1																	125	652.1301	AFT BRACKET ASSY		
	1										1	1	1	1							124	651.0208	RH HOIST GUARD KIT		
	1										1	1	1	1							123	651.0206	LH HOIST GUARD KIT		
		1																			122	651.4106	WIRING HARNESS		
1									1												121	651.4104	WIRING HARNESS		
					1																120	648.0203	CLAMP ASSY		
						1							1		1				1		119	634.9701	FLOAT PLACARD		△7
			3FT				3FT					3FT		3FT			3FT			3FT	118	601.1641	SPIRAL WRAP		
16								16	16												117	601.2347	RIVET	MS20470AD3-5	
8								8	8												116	601.4072	CAP SCREW	NAS1352-04-8P	
								1													115	651.4105	EC145 T2 WIRING HARNESS		
1								1	1												114	601.4044	RECEPTACLE COVER	523-MS3181-08CA	△19
1								1	1												113	601.4045	DUMMY RECEPTACLE	654-MS3115-8A	△18
1								1	1												112	600.1040	CONDUCTIVE ADHESIVE	LOCTITE 3888	
1								1	1												111	651.2214	DOUBLER		
	2										2	2	2	2	2		2		2	2	110	646.8101	CLAMP ASSY		
					1																109	647.9903	VALVE COVER ASSY		△22
2								2	2												108	601.4020	NUTPLATE RING	AT283-8	FSU-8
			4			4	4					4	4	4	4		4		4	4	107	600.0786	BOLT	AN3C7A	
			4			2	4					4	2	4	2		4		2	4	106	601.0718	COTTER PIN	MS24665-151	
			2			2	2					2		2	2		2			2	105	600.0897	LIFERAFT LABEL		
		8				8	8					8		8	8		8			8	104	601.2239	RIVET	CCR264CS-3-02	

ORIGINAL DATE (MO-DA-YR) 08-03-20
DRAWN BY A.FLORES
CHECKER R.TAKAHASHI
DRAWING APPROVAL A.QUAN 08-03-20
CONTRACT No.

UNLESS OTHERWISE SPECIFIED DIMENSIONS ARE IN INCHES
TOLERANCES ARE:
2 PLACE DECIMALS ±.01
3 PLACE DECIMALS ±.005
ANGLES ± .5°

DART AEROSPACE
APICAL INDUSTRIES, INC. dba DART AEROSPACE
3030 ENTERPRISE CT., SUITE A
VISTA, CA. 92081
(760)-724-5300

BK117 D2/D3 EMERGENCY FLOAT AND LIFERAFT KIT

SIZE B | CAGE CODE 07MZ6 | DWG. NO. 654.6700 | REV. N/C

SCALE

Released on 8/28/2020

Limited Release DE Approval Needed

THE INFORMATION CONTAINED IN THIS DRAWING IS THE SOLE PROPERTY OF APICAL INDUSTRIES DBA DART AEROSPACE. ANY REPRODUCTION IN PART OR WHOLE WITHOUT THE WRITTEN PERMISSION OF APICAL INDUSTRIES DBA DART AEROSPACE IS PROHIBITED.

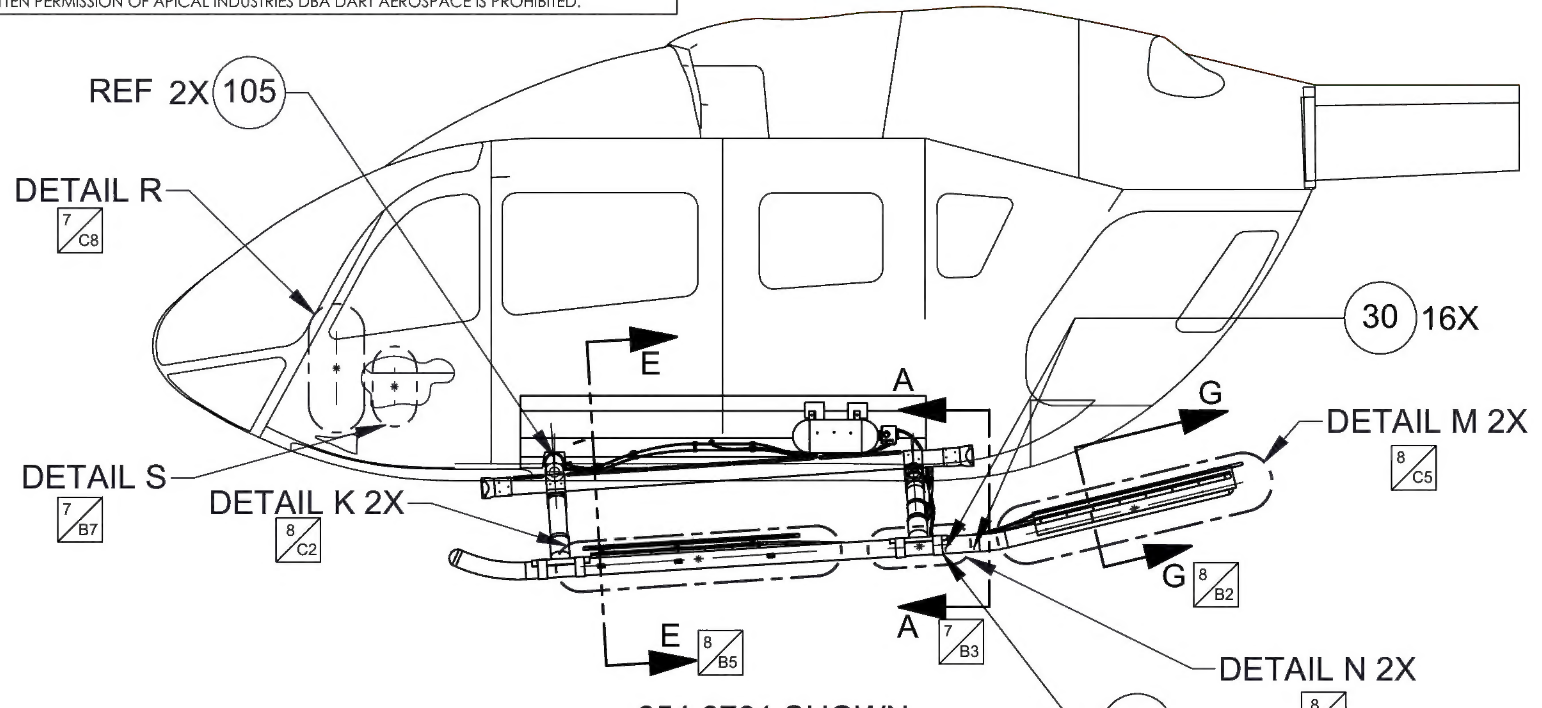

654.6701 SHOWN
FLOATS REMOVED

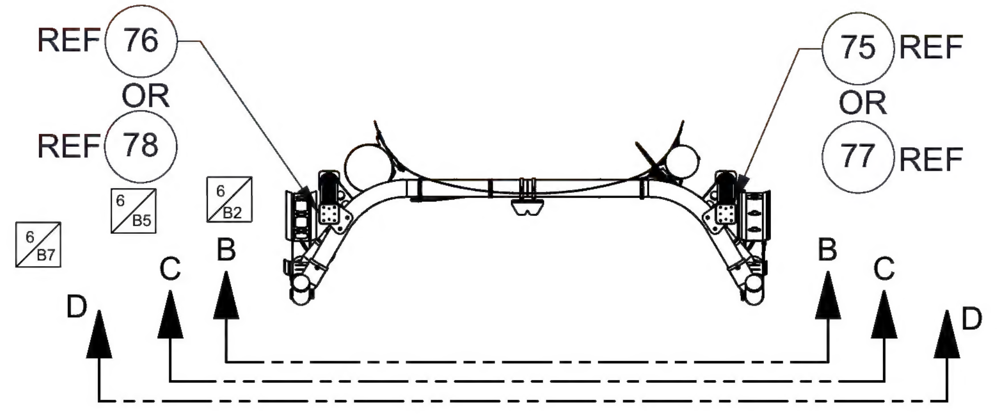

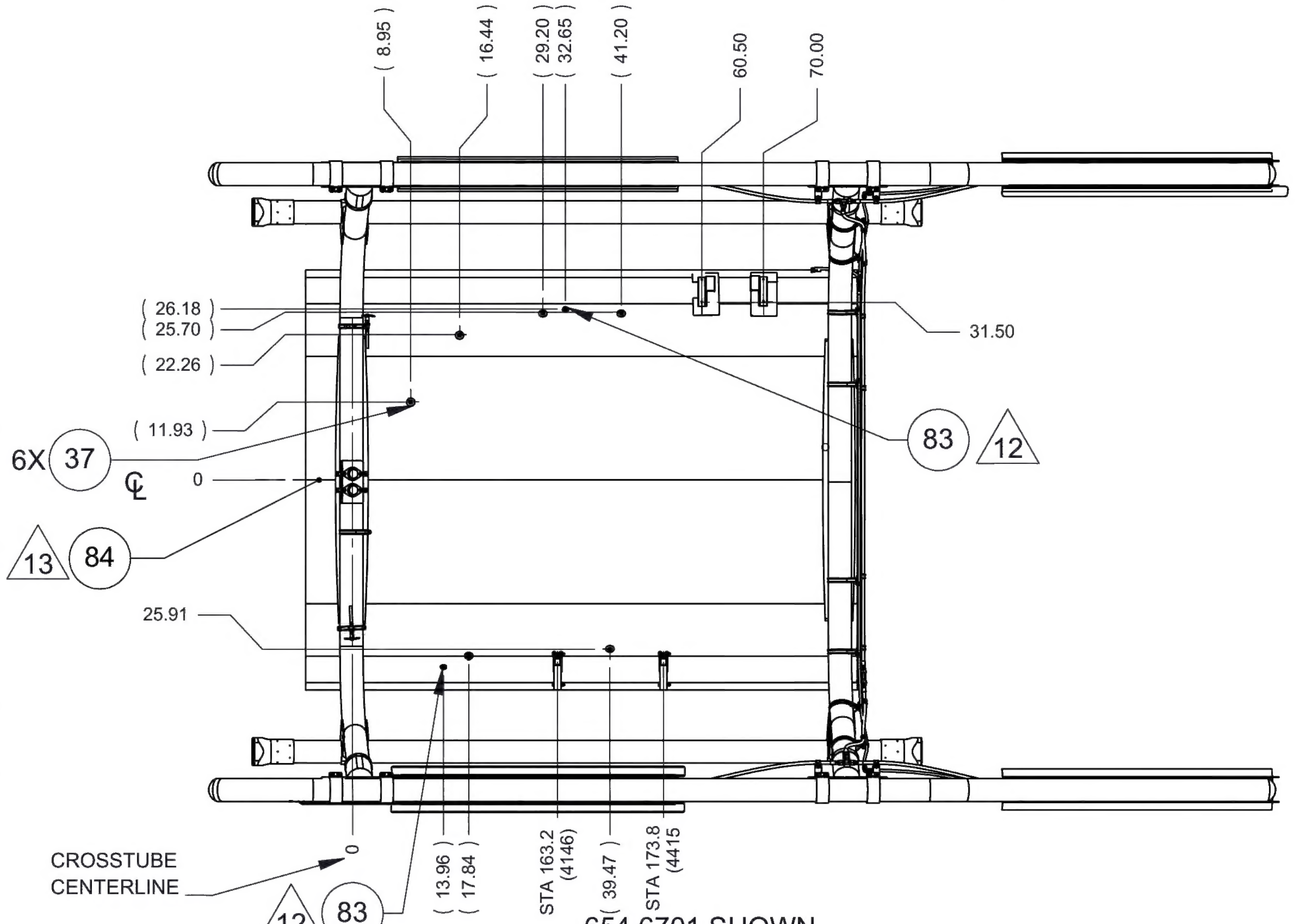

654.6701 SHOWN
FLOATS & RESERVOIRS REMOVED

ORIGINAL DATE (MO-DA-YR) 08-03-20		DART AEROSPACE APICAL INDUSTRIES, INC. dba DART AEROSPACE 3030 ENTERPRISE CT., SUITE A VISTA, CA. 92081 (760)-724-5300
DRAWN BY A.FLORES	CHECKER R.TAKAHASHI	
DRAWING APPROVAL A.QUAN 08-03-20		
CONTRACT No.		BK117 D2/D3 EMERGENCY FLOAT AND LIFERAFT KIT
UNLESS OTHERWISE SPECIFIED DIMENSIONS ARE IN INCHES TOLERANCES ARE: 2 PLACE DECIMALS ±.05 3 PLACE DECIMALS ±.030 ANGLES ± .5°		SIZE B | CAGE CODE 07MZ6 | DWG. NO. 654.6700 | REV. N/C SCALE | SHEET 5 OF 10

Released on 8/28/2020

Limited Release DE Approval Needed

THE INFORMATION CONTAINED IN THIS DRAWING IS THE SOLE PROPERTY OF APICAL INDUSTRIES DBA DART AEROSPACE. ANY REPRODUCTION IN PART OR WHOLE WITHOUT THE WRITTEN PERMISSION OF APICAL INDUSTRIES DBA DART AEROSPACE IS PROHIBITED.

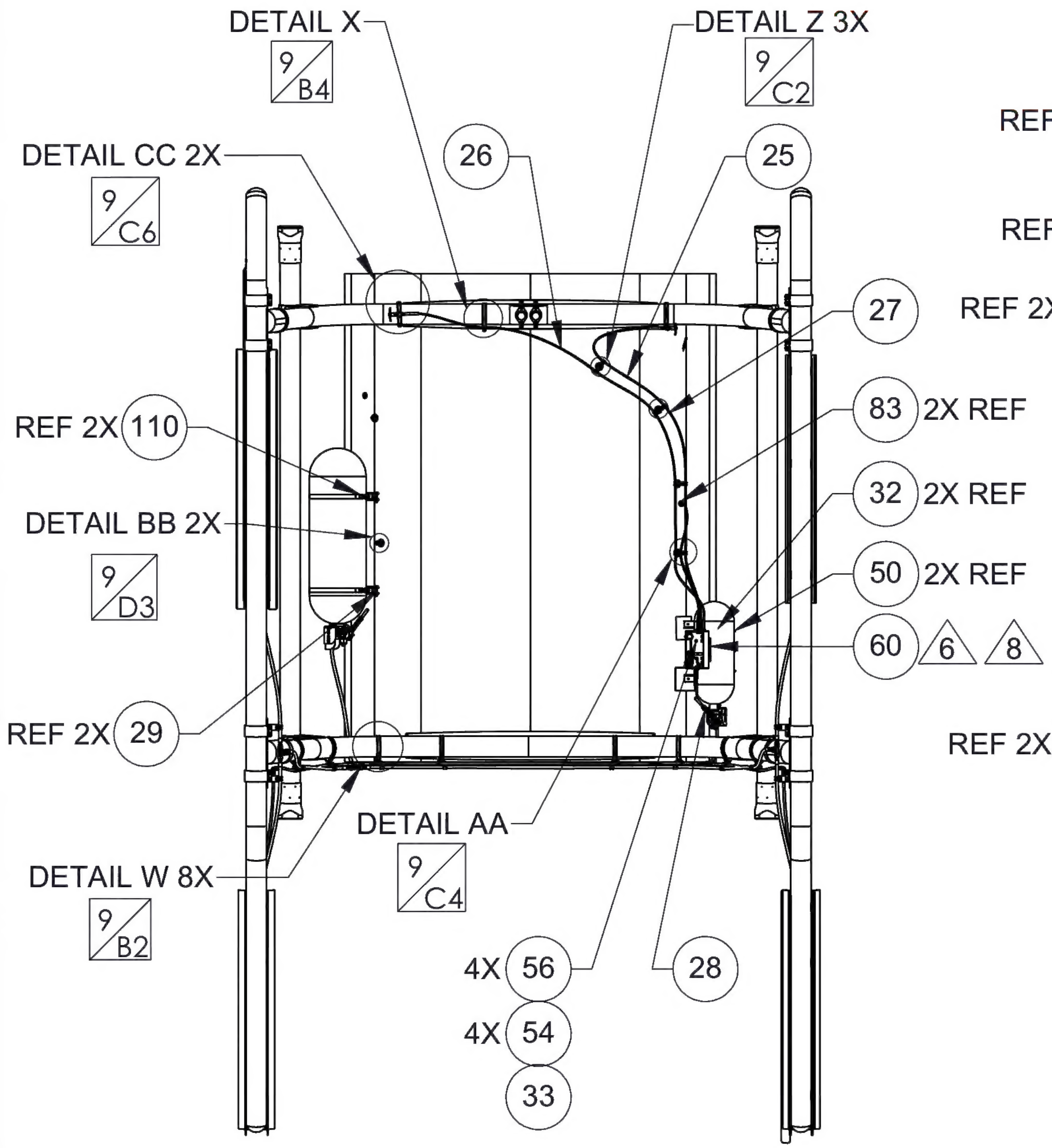

SECTION B-B
654.6701 SHOWN 5 B7

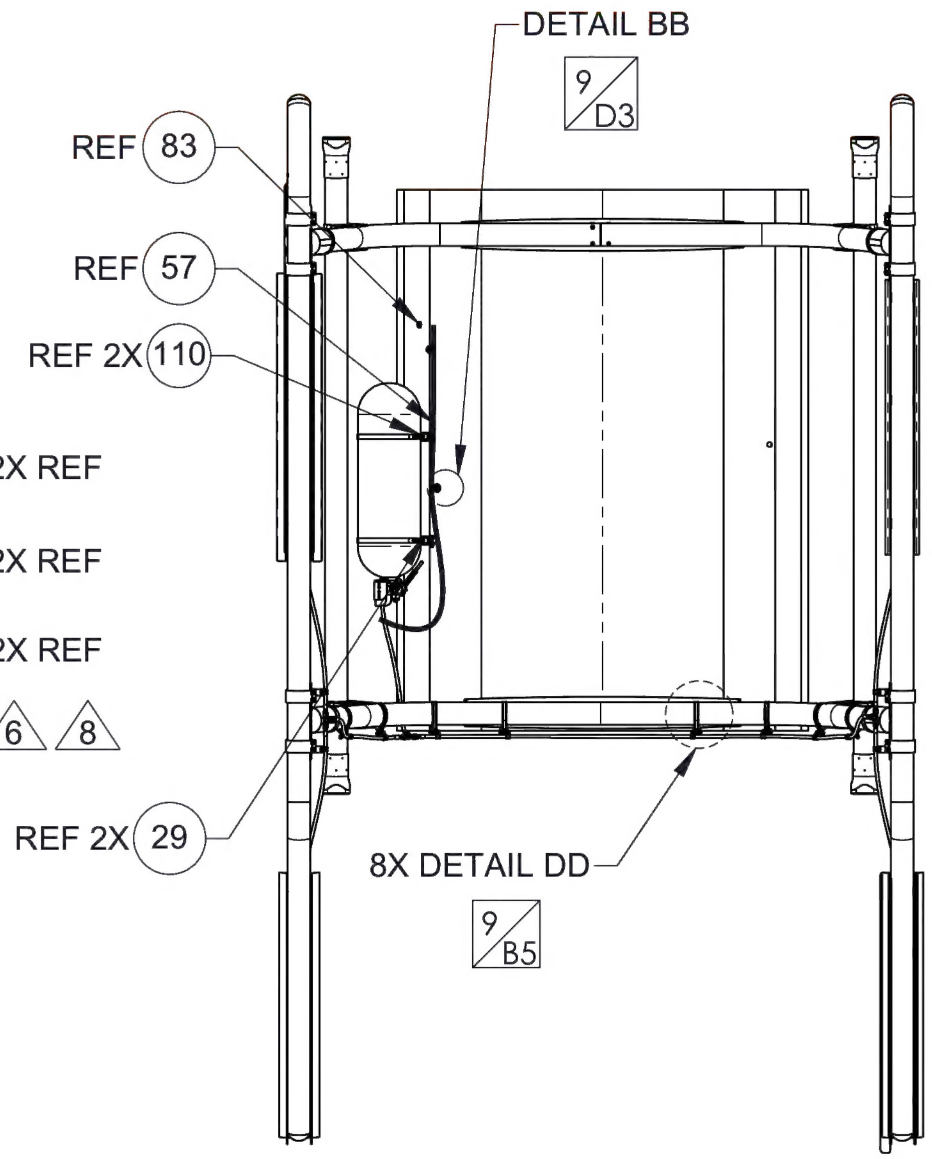

SECTION C-C
654.6702 SHOWN 5 B7

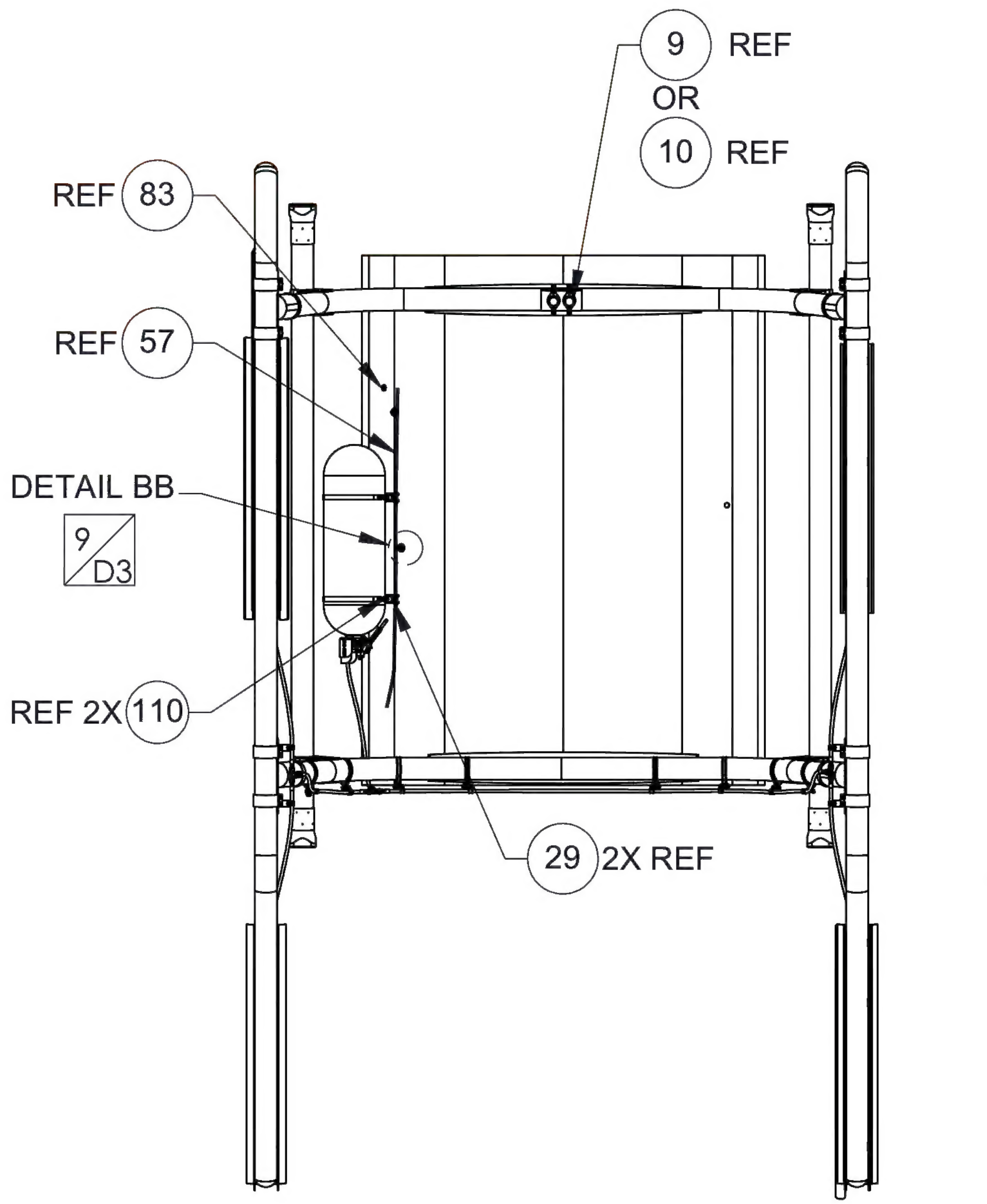

SECTION D-D
654.6702 SHOWN WITH 654.6713 OR 654.6714
ELECTRICAL ACTIVATION SYS 5 B7

ORIGINAL DATE (MO-DA-YR) 08-03-20	DART AEROSPACE APICAL INDUSTRIES, INC. dba DART AEROSPACE 3030 ENTERPRISE CT., SUITE A VISTA, CA. 92081 (760)-724-5300
DRAWN BY A.FLORES / CHECKER R.TAKAHASHI	
DRAWING APPROVAL A.QUAN 08-03-20	
CONTRACT No.	BK117 D2/D3 EMERGENCY FLOAT AND LIFERAFT KIT
UNLESS OTHERWISE SPECIFIED DIMENSIONS ARE IN INCHES TOLERANCES ARE: 2 PLACE DECIMALS ±.05 3 PLACE DECIMALS ±.030 ANGLES ± .5°	SIZE B / CAGE CODE 07MZ6 / DWG. NO. 654.6700 / REV. N/C
	SCALE / SHEET 6 OF 10

Released on 8/28/2020

Limited Release DE Approval Needed

THE INFORMATION CONTAINED IN THIS DRAWING IS THE SOLE PROPERTY OF APICAL INDUSTRIES DBA DART AEROSPACE. ANY REPRODUCTION IN PART OR WHOLE WITHOUT THE WRITTEN PERMISSION OF APICAL INDUSTRIES DBA DART AEROSPACE IS PROHIBITED.

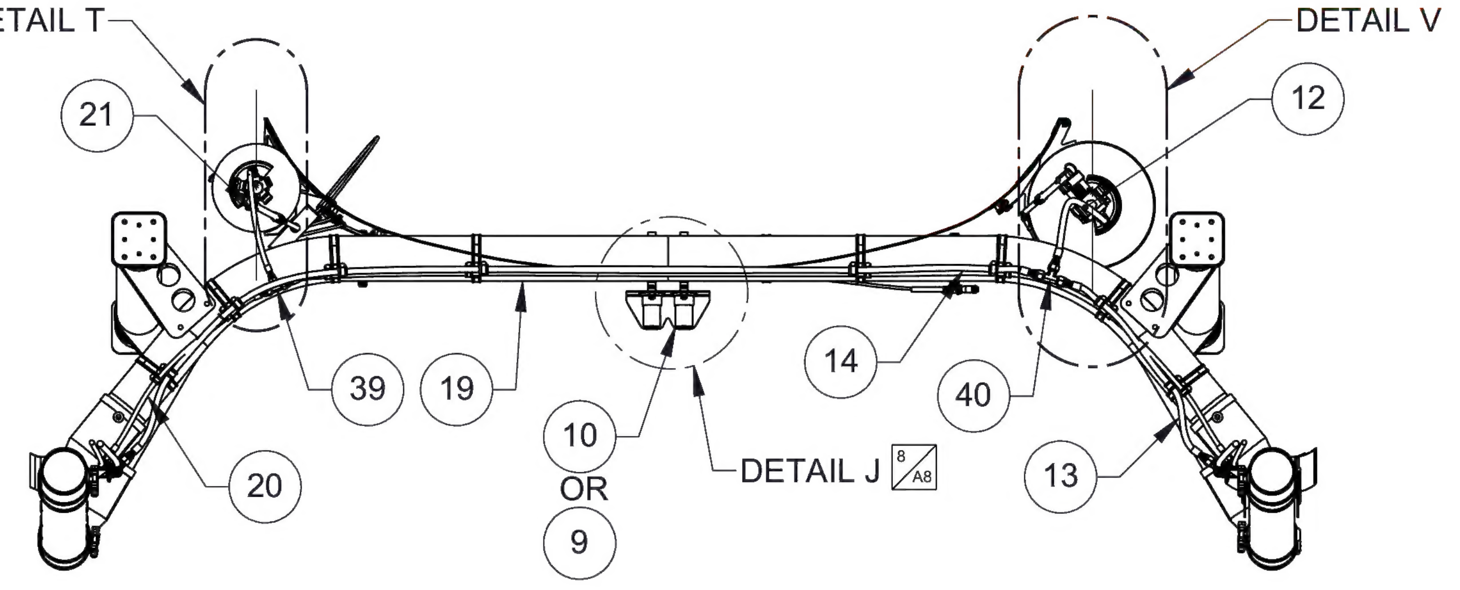

SECTION A-A 5/B3

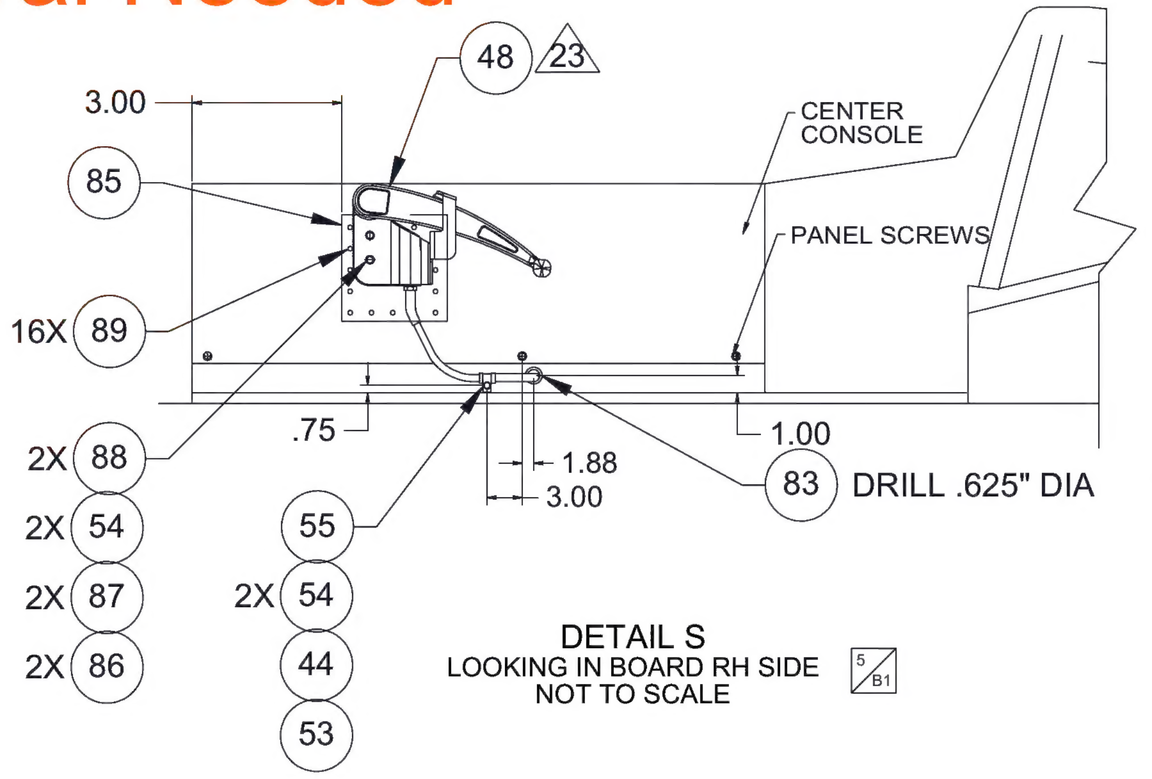

DETAIL S
LOOKING IN BOARD RH SIDE
NOT TO SCALE 5/B1

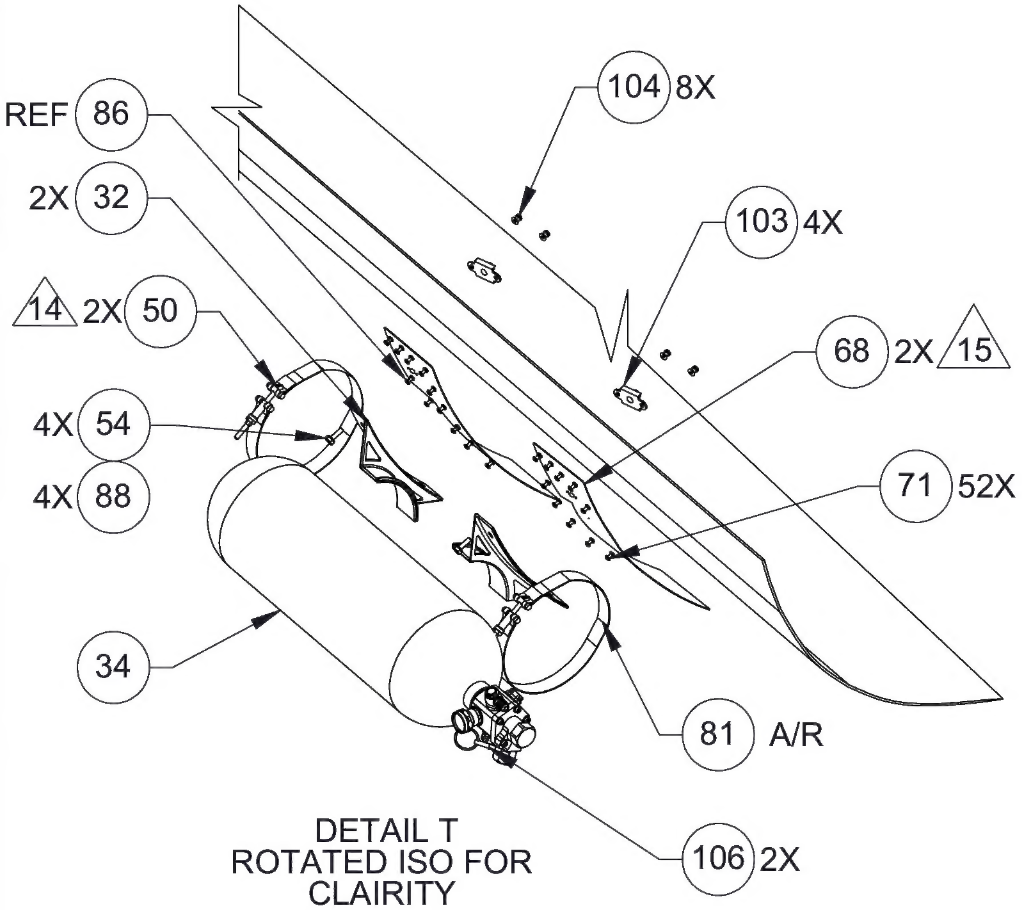

DETAIL T
ROTATED ISO FOR
CLAIRITY

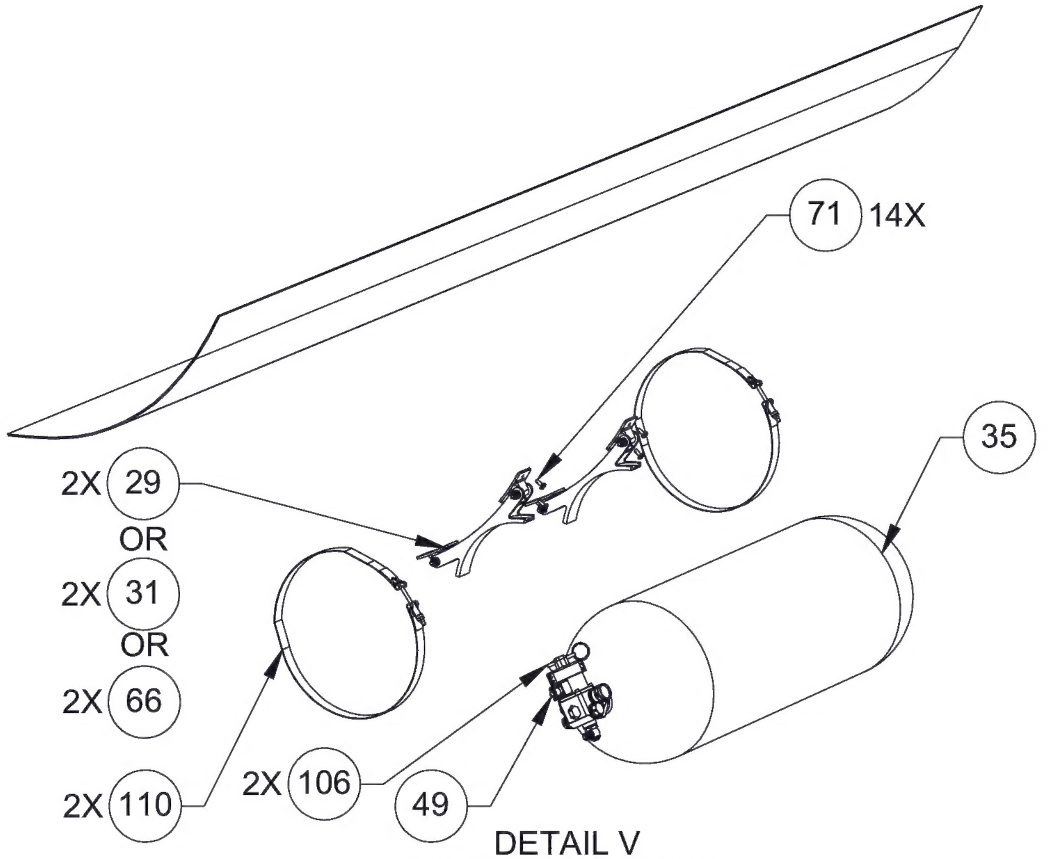

DETAIL V
ROTATED ISO FOR
CLAIRITY

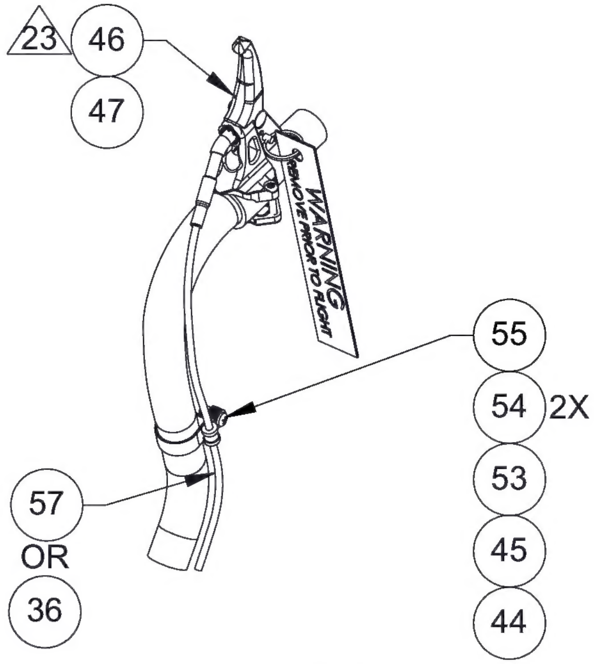

DETAIL R 5/B1

ORIGINAL DATE (MO-DA-YR)	08-03-20
DRAWN BY A.FLORES	CHECKER R.TAKAHASHI
DRAWING APPROVAL	A.QUAN 08-03-20
CONTRACT No.	

UNLESS OTHERWISE SPECIFIED
DIMENSIONS ARE IN INCHES
TOLERANCES ARE:
2 PLACE DECIMALS ±.05
3 PLACE DECIMALS ±.030
ANGLES ± .5°

DART AEROSPACE
APICAL INDUSTRIES, INC.
dba DART AEROSPACE
3030 ENTERPRISE CT., SUITE A
VISTA, CA. 92081
(760)-724-5300

BK117 D2/D3 EMERGENCY FLOAT AND LIFERAFT KIT

SIZE	CAGE CODE	DWG. NO.	REV.
B	07MZ6	654.6700	N/C

SCALE

Released on 8/28/2020

Limited Release DE Approval Needed

THE INFORMATION CONTAINED IN THIS DRAWING IS THE SOLE PROPERTY OF APICAL INDUSTRIES DBA DART AEROSPACE. ANY REPRODUCTION IN PART OR WHOLE WITHOUT THE WRITTEN PERMISSION OF APICAL INDUSTRIES DBA DART AEROSPACE IS PROHIBITED.

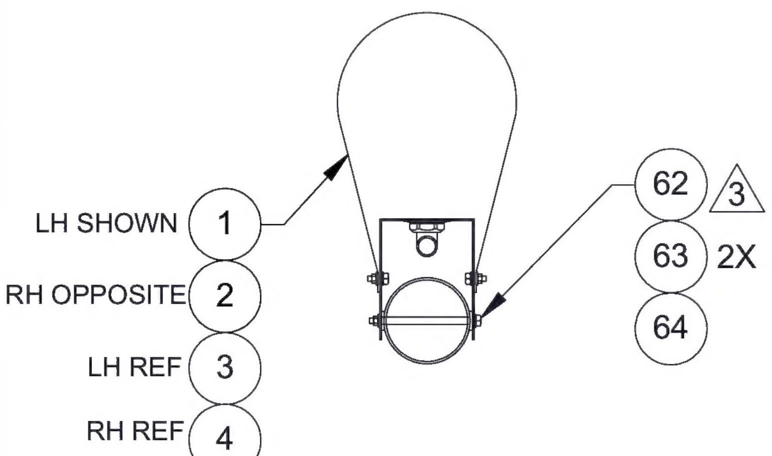

SECT G-G
TYP 6X 5/B4

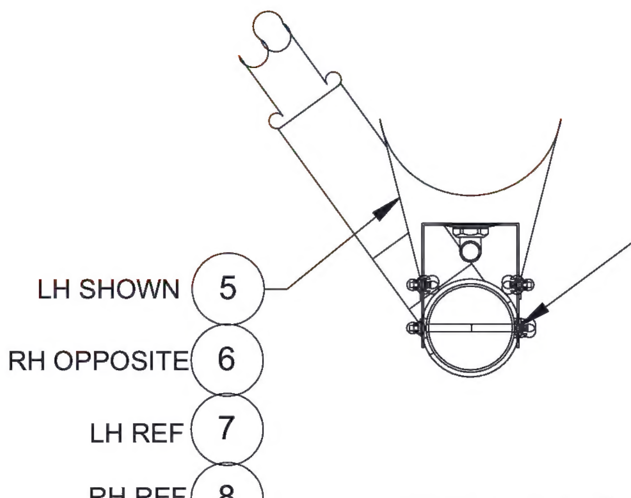

SECT E-E
TYP 6X 5/B2

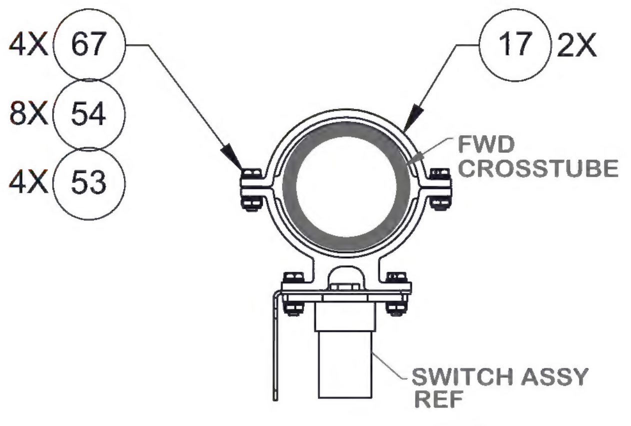

DETAIL J 7/B3
654.6713 ONLY

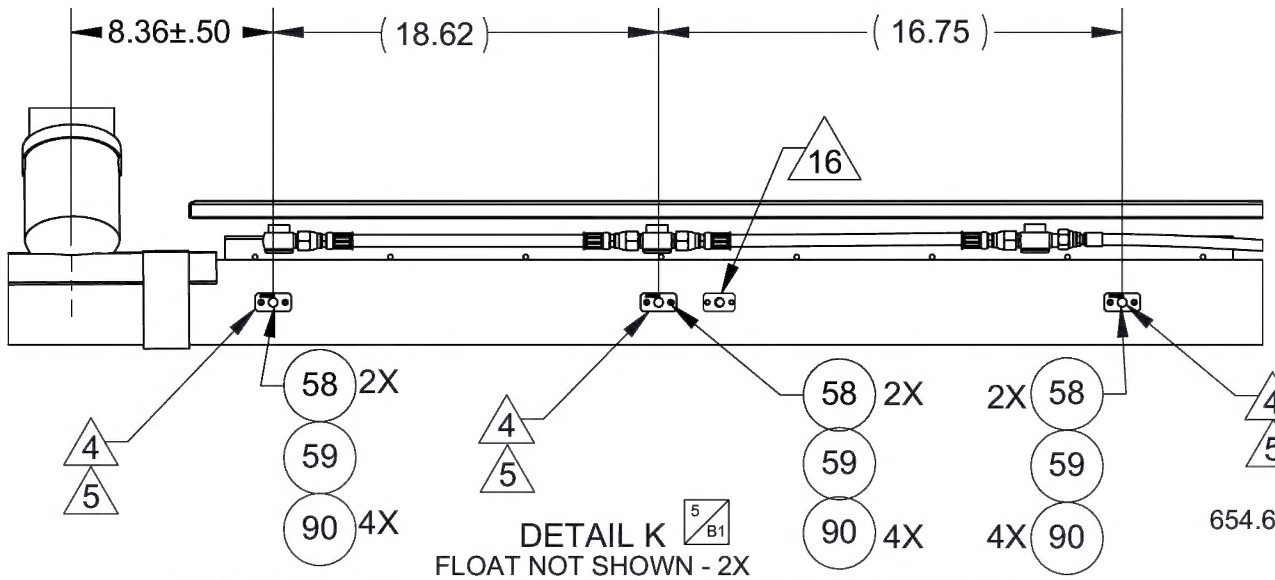

DETAIL K 5/B1
FLOAT NOT SHOWN - 2X
654.6701 AND 654.6702 CONFIGURATION IF FLOAT GEAR IS USED

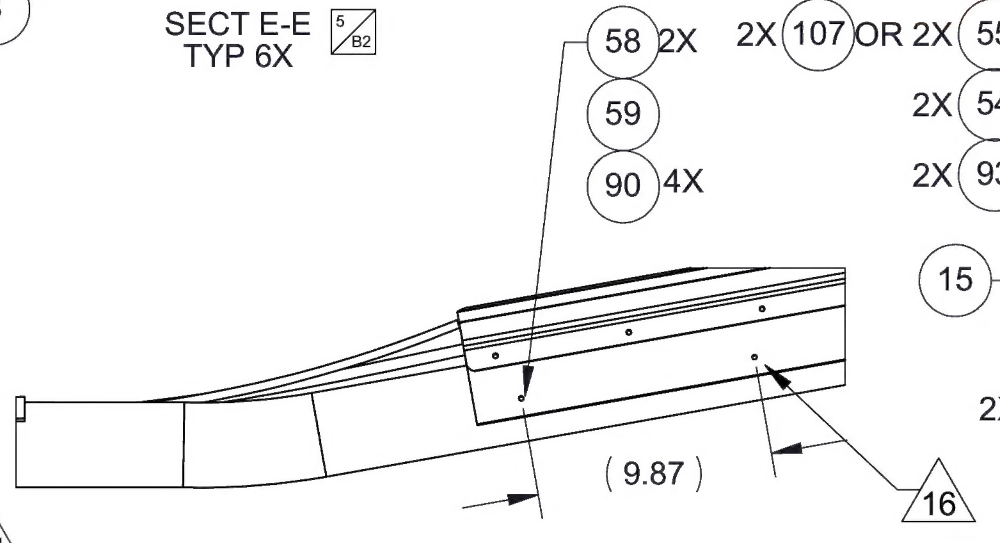

DETAIL M 5/B4
FLOAT NOT SHOWN - 2X
654.6701 AND 654.6702 CONFIGURATION IF FLOAT GEAR IS USED

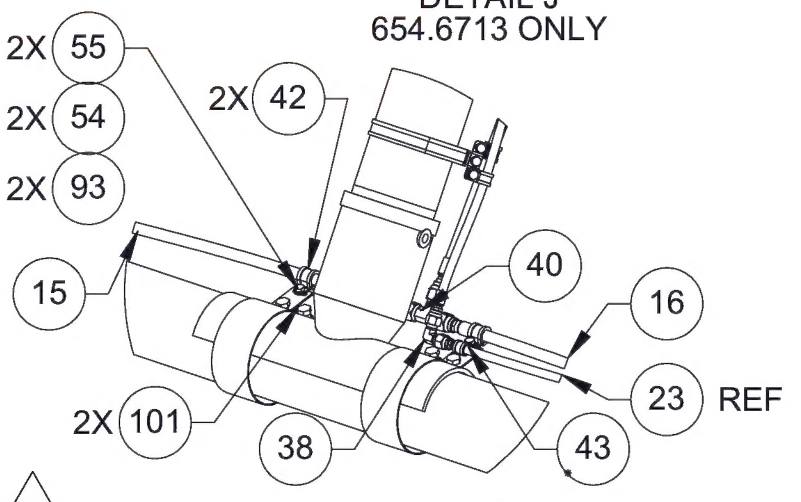

DETAIL N 2X 5/B4
654.6701 CONFIGURATION ONLY

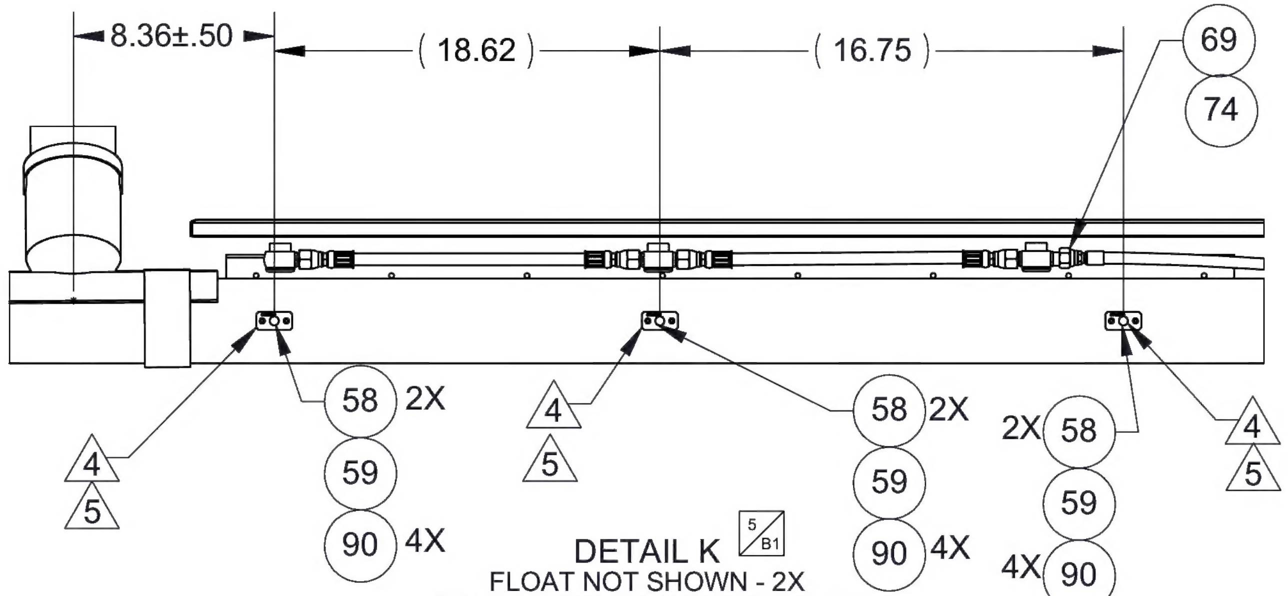

DETAIL K 5/B1
FLOAT NOT SHOWN - 2X
654.6711 CONFIGURATION ONLY

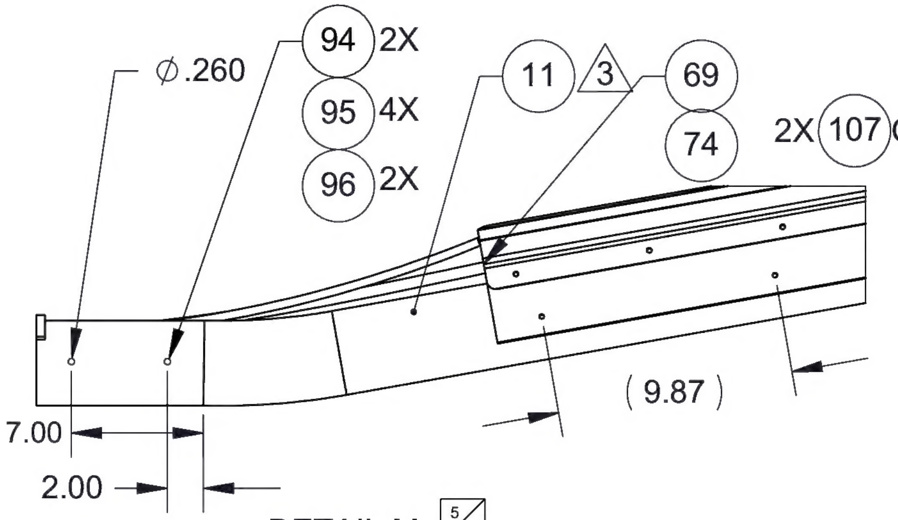

DETAIL M 5/B4
FLOAT NOT SHOWN - 2X
654.6711 CONFIGURATION ONLY

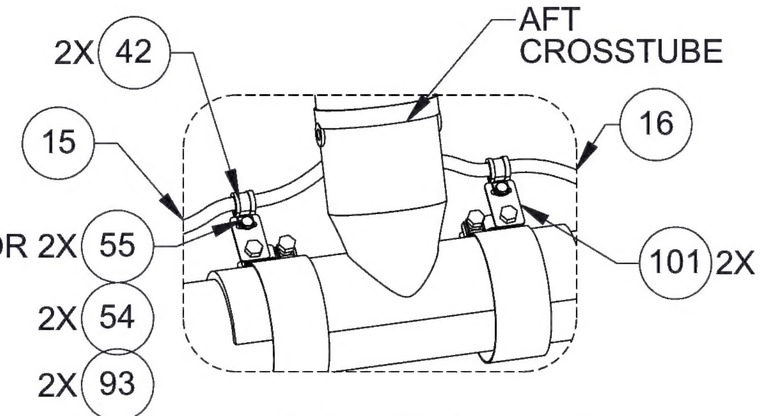

DETAIL N 2X 5/B4
654.6702 CONFIGURATION ONLY

ORIGINAL DATE (MO-DA-YR) 08-03-20	DART AEROSPACE APICAL INDUSTRIES, INC. dba DART AEROSPACE 3030 ENTERPRISE CT., SUITE A VISTA, CA. 92081 (760)-724-5300
DRAWN BY A.FLORES / CHECKER R.TAKAHASHI	
DRAWING APPROVAL A.QUAN 08-03-20	BK117 D2/D3 EMERGENCY FLOAT AND LIFERAFT KIT
CONTRACT No.	SIZE B / CAGE CODE 07MZ6 / DWG. NO. 654.6700 / REV. N/C
UNLESS OTHERWISE SPECIFIED DIMENSIONS ARE IN INCHES TOLERANCES ARE: 2 PLACE DECIMALS ±.05 3 PLACE DECIMALS ±.030 ANGLES ± .5°	SCALE / SHEET 8 OF 10

Released on 8/28/2020

Limited Release DE Approval Needed

THE INFORMATION CONTAINED IN THIS DRAWING IS THE SOLE PROPERTY OF APICAL INDUSTRIES DBA DART AEROSPACE. ANY REPRODUCTION IN PART OR WHOLE WITHOUT THE WRITTEN PERMISSION OF APICAL INDUSTRIES DBA DART AEROSPACE IS PROHIBITED.

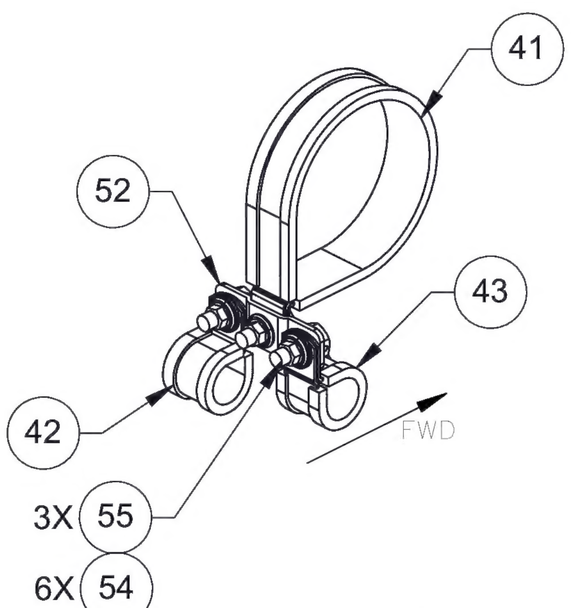

DETAIL W 6/C1
8X

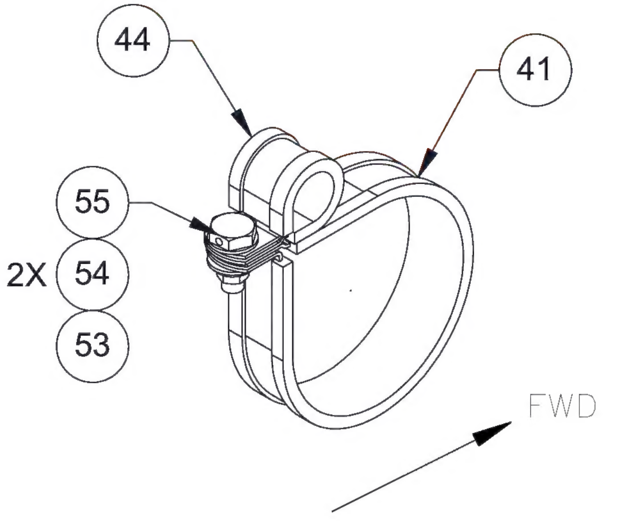

DETAIL X 6/A2

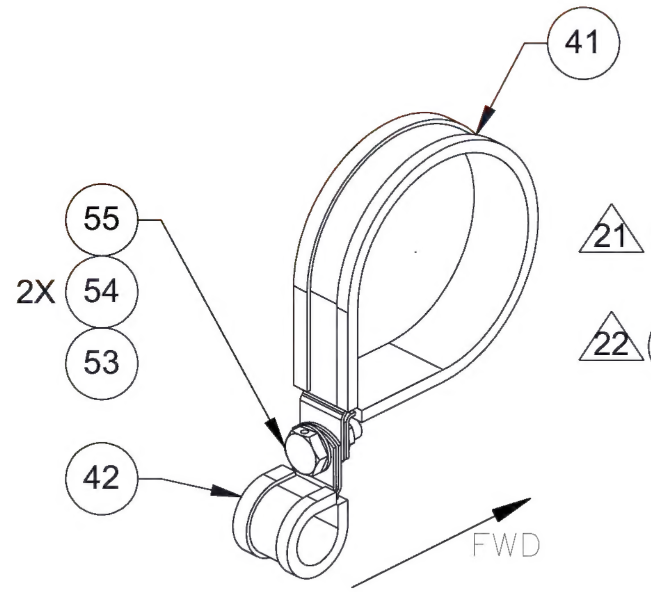

DETAIL DD 6/B5
8X

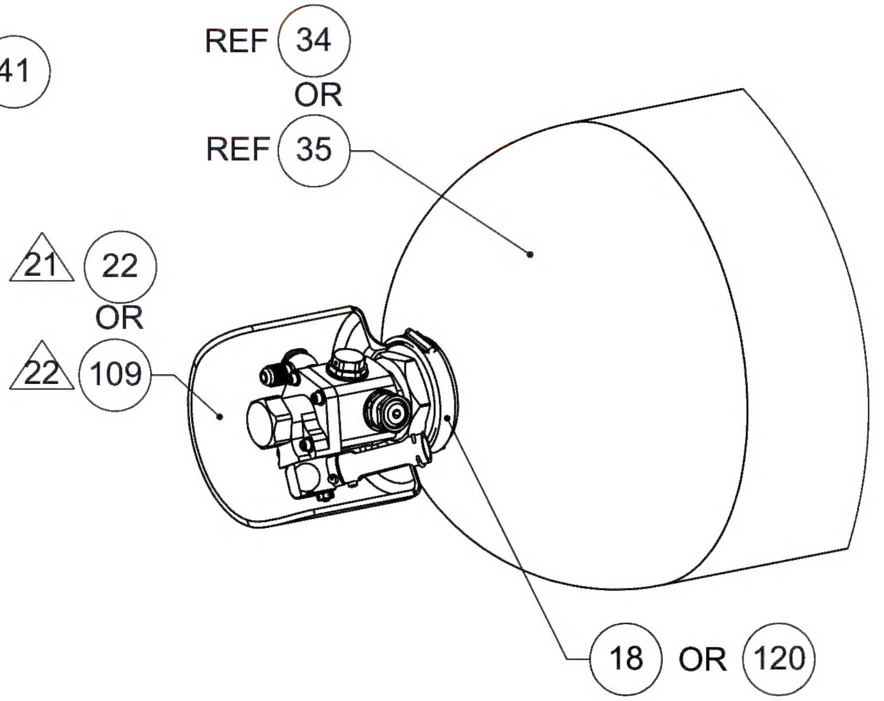

OPTION 654.6716 SHOWN

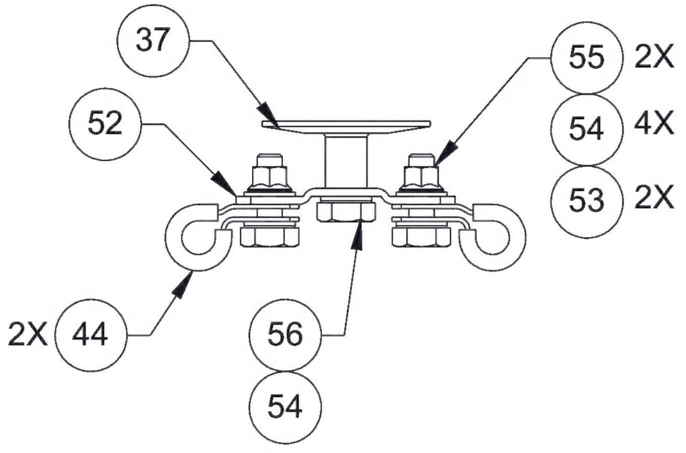

DETAIL Z 6/B2
3X

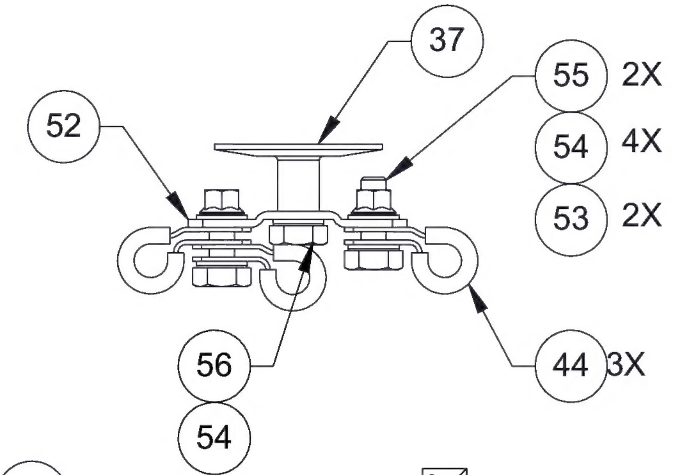

DETAIL AA 6/B2

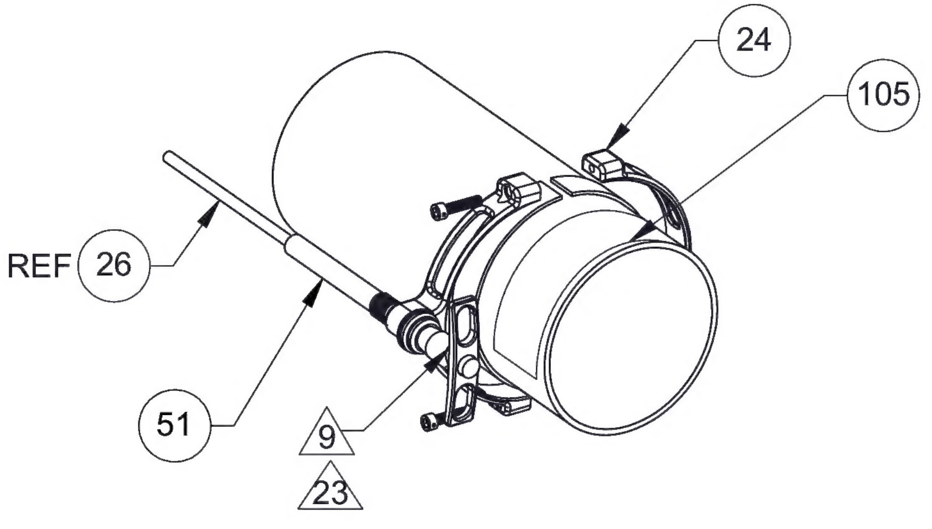

DETAIL CC 6/A1
2X

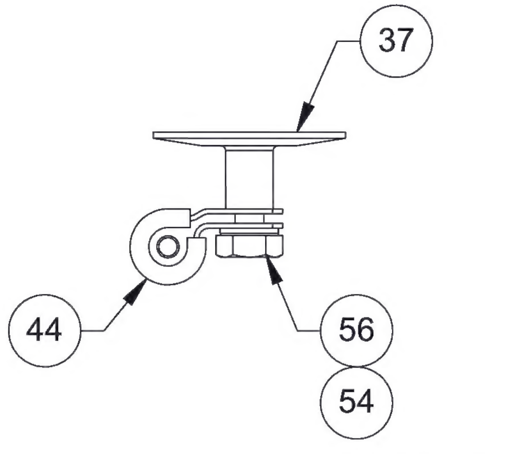

DETAIL BB 6/B2 6/B4 6/B7
4X

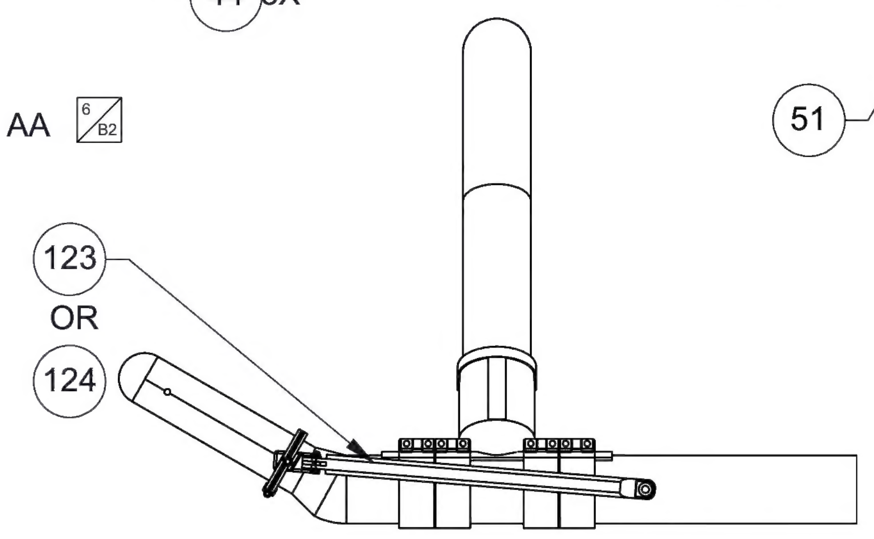

HOIST GUARD ASSY
(OPTIONAL)

ORIGINAL DATE (MO-DA-YR)	08-03-20
DRAWN BY A.FLORES	CHECKER R.TAKAHASHI
DRAWING APPROVAL A.QUAN 08-03-20	
CONTRACT No.	

UNLESS OTHERWISE SPECIFIED
DIMENSIONS ARE IN INCHES
TOLERANCES ARE:
2 PLACE DECIMALS ±.05
3 PLACE DECIMALS ±.030
ANGLES ± .5°

DART AEROSPACE
APICAL INDUSTRIES, INC. dba DART AEROSPACE
3030 ENTERPRISE CT., SUITE A
VISTA, CA. 92081
(760)-724-5300

BK117 D2/D3 EMERGENCY FLOAT AND LIFERAFT KIT

SIZE	CAGE CODE	DWG. NO.	REV.
B	07MZ6	654.6700	N/C

SCALE

Released on 8/28/2020

Limited Release DE Approval Needed

THE INFORMATION CONTAINED IN THIS DRAWING IS THE SOLE PROPERTY OF APICAL INDUSTRIES DBA DART AEROSPACE. ANY REPRODUCTION IN PART OR WHOLE WITHOUT THE WRITTEN PERMISSION OF APICAL INDUSTRIES DBA DART AEROSPACE IS PROHIBITED.

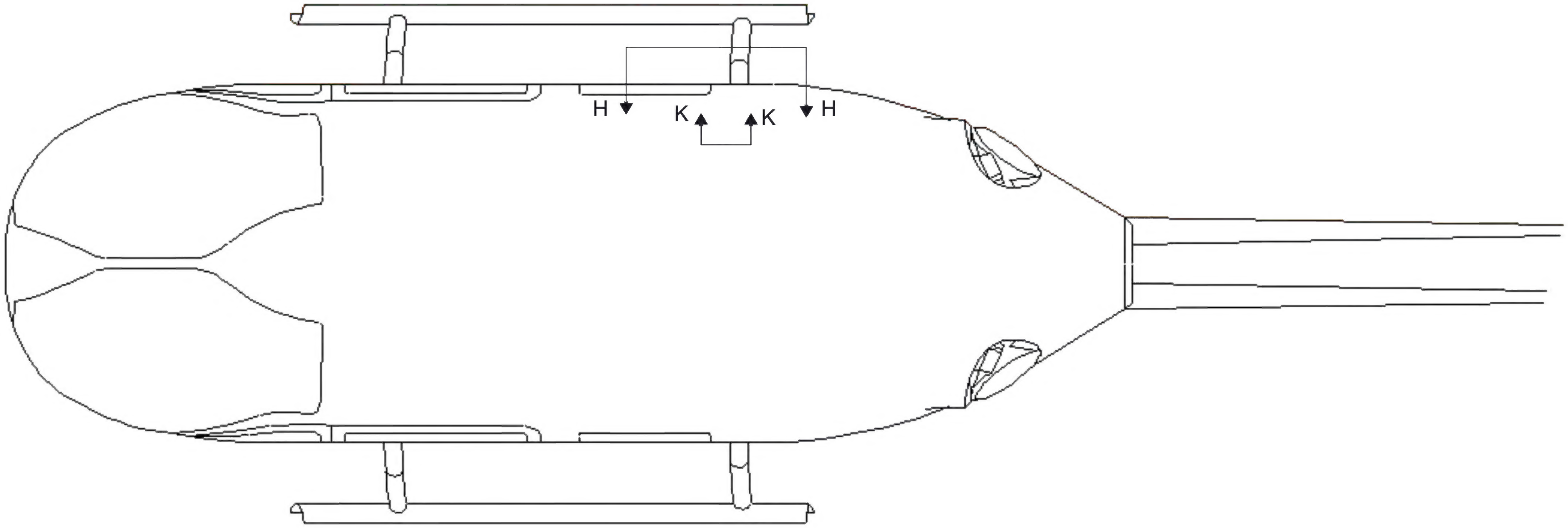

654.6712, 657.6713, 654.6721 SHOWN

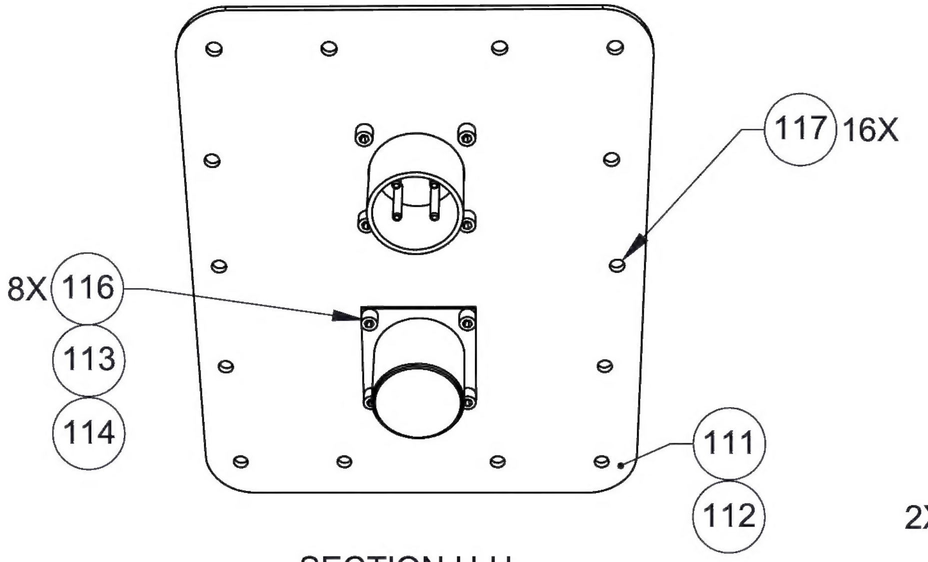

SECTION H-H
180° ROTATED

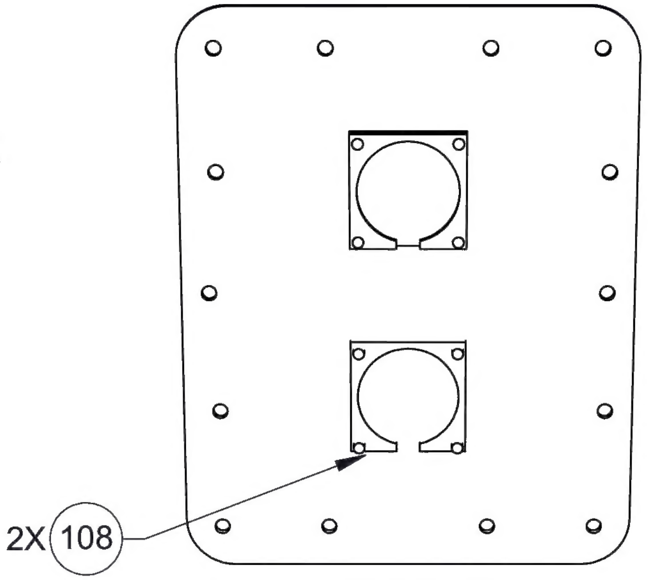

SECTION K-K

ORIGINAL DATE (MO-DA-YR) 08-03-20	DART AEROSPACE APICAL INDUSTRIES, INC. dba DART AEROSPACE	3030 ENTERPRISE CT., SUITE A VISTA, CA. 92081 (760)-724-5300
DRAWN BY A.FLORES / CHECKER R.TAKAHASHI		
DRAWING APPROVAL A.QUAN 08-03-20	BK117 D2/D3 EMERGENCY FLOAT AND LIFERAFT KIT	
CONTRACT No.		
UNLESS OTHERWISE SPECIFIED DIMENSIONS ARE IN INCHES TOLERANCES ARE: 2 PLACE DECIMALS ±.05 3 PLACE DECIMALS ±.030 ANGLES ± .5°	SIZE B / CAGE CODE 07MZ6 / DWG. NO. 654.6700 / REV. N/C	
	SCALE	SHEET 10 OF 10